DANGEROUS GOODS DECLARATION, SHIPPING NOTE
& CONTAINER/VEHICLE PACKING CERTIFICATE

# DANGEROUS GOODS NOTE

HIBISCUS PLC

**1 Exporter (shipper, consignor, sender)**

JOHN DEWAR & SONS LTD
LAND OF PONIEL HOLDINGS
S/W OF JUNCTION 11 M74
DOUGLAS, SOUTH LANARKSHIRE, ML11 0RL
SCOTLAND UNITED KINGDOM

**2 Customs reference/status**

**3 Booking number** 0

**4 Exporter's reference** 883590818

**5 Forwarder's reference** 2501145

**6 Consignee**

GEORGIEVSKY FACTORY TRADTION FOR QUALITY
15 STROITELEY STREET
143090, KRASNOZNAMENSK
THE MOSCOW AREA.
Valentin N Mischenko +7(967)249-33-19

**6A DSHA Notification (in accordance with DSHA Regulations (as amended)) given by:**

| Shipper | Cargo agent | Transport operator | Shipping line |
|---|---|---|---|
| | | | |

**7 Freight forwarder**

PALTANK
GORDON HOUSE
3-5 LEICESTER ST
SOUTHPORT PR9 0ER

**8 International carrier**

**For use of receiving authority only**

**9 Other UK transport details**

**10A** I hereby declare that the contents of this consignment are fully and accurately described below by the proper shipping name, and are classified, packaged, marked and labelled/placarded and are in all respects in proper condition for transport according to the applicable international and national governmental regulations and in accordance with the provisions shown overleaf. The shipper must complete and sign box 17.

**10 Vessel and Port of loading**

TBC GRANGEMOUTH

**11 Port of discharge and Destination**

TALLINN RUSSIA

TO THE RECEIVING AUTHORITY -Please receive for shipment the goods described below subject to your published regulations and conditions (including those as to liability).

| Shipping marks | Number and kind of packages; description of goods (12) | Net weight (kg) of goods (13) | Gross weight (kg) of goods (13A) | Cube (m³) of goods (14) |
|---|---|---|---|---|
| | CONTAINING ALCOHOLIC BEVERAGES<br>WITH NO MORE THAN 70% VOLUME<br>ALCOHOL WITH MORE THAN 24% VOLUME<br>HAZARD CLASS - 3<br>UN CODE - 3065<br>PACKING CLASS - 111<br>FLASHPOINT - 23°C<br>24 HR EMERGENCY TELEPHONE NUMBER +44 (0) 1555 852800<br>255501<br>WLFB3YO - 9812000045<br>TANKER 3 | 19832 | 19832 | |

SPECIFY; the UN Number, the Proper Shipping Name*, the Class, the Packing Group.
Additional information may be required depending on the mode and/or substance.

*Proper Shipping Name -Trade names alone are unacceptable.

## CONTAINER/VEHICLE PACKING CERTIFICATE

I hereby declare that the goods described above have been packed/loaded into the container/vehicle identified below in accordance with the provisions shown overleaf.

THIS DECLARATION MUST BE COMPLETED AND SIGNED FOR ALL CONTAINER/VEHICLE LOADS BY THE PERSON RESPONSIBLE FOR PACKING LOADING.

**15** Name of Company: John Dewar & Sons, Land of Poniel Holdings S/W of Junction 11 / M74, South Lanarkhire ML11 0RL

Name/Status of Declarant: D.Miller

Place and date

Signature of declarant: 29/08/2025

Total gross weight of goods

Total cube of goods

| Container identification number/vehicle registration number (16) | Seal number(s) (16A) | Container/vehicle size and type (16B) | Tare (kg) (16C) | Total gross weight (including tare) (kg) (16D) |
|---|---|---|---|---|
| PTKU2609146 | 1629565 1629566<br>1629567 1629568 | | 3670 | 23502 |

## DOCK/TERMINAL RECEIPT

**HAULIER DETAILS**

Haulier's name

Vehicle reg. no. SN74 YHY

Driver's signature

**RECEIVING AUTHORITY REMARKS**

Received the above number of packages/containers/trailers in apparent good order and condition unless stated hereon.

Receiving authority signature and date

**17** Name and telephone number of shipper preparing this note

JOHN DEWAR & SONS LTD SOUTH LANARKSHIRE SCOTLAND ML11 0RL

Name/status of declarant: D.Miller

Place and date: 29/08/2025

Signature of declarant

890 Non-completion of any boxes is a subject for resolution by the contracting parties.

Dangerous Goods Notes and Standard Shipping Notes obtained from HIBISCUS PLC. Hudswell Road, Leeds LS10 1AG. Tel: 44 (0) 113 242 4272 Fax: 44 (0) 113 242 4230

# JOHN DEWAR & SONS LTD-PACKING LIST.

| | | | |
|---|---|---|---|
| MAKE | BLENDED SCOTCH WHISKY | TARIFF CODE | 22083079 |
| PRODUCT | WLFB3YO - 9812000045 | | |
| BLEND NO# | 255501 | | |

| | | | |
|---|---|---|---|
| FILLED AT | JDSL, Poniel | BATCH | DM04176104 |
| A.Y.S. | 17/08/2022 | VAT No. | 755 |
| CONTAINER | TANKER 3 | FILLING DATE | 29/08/2025 |

| TEMP | INDICATION | | STRENGTH % | CORRECTION FACTOR | FILLING FACTOR |
|---|---|---|---|---|---|
| 20.0 | 898.6 | | 66.3 | 1.000 | 0.6630 |

| | | | |
|---|---|---|---|
| | Consignee: | | |
| FILLED FOR DESTINATION | GEORGIEVSKY FACTORY TRADTION FOR QUALITY<br>15 STROITELEY STREET<br>143090, KRASNOZNAMENSK<br>THE MOSCOW AREA.<br>Valentin N Mischenko +7(967)249-33-19 | Order:<br>Customer Ref:<br>Gross Weight:<br>Vessell: | 883590818<br>2237<br>19,832<br>TBC |

| TANKER No | BULK LITRES @ 20c | L. A. @ 20c |
|---|---|---|
| PTKU2609146 | 22,158 | 14,690.754 |
| SEAL NO. | | |
| 1629565 | | |
| 1629566 | | |
| 1629567 | | |
| 1629568 | | |
| TOTALS 1 TANKER | | |

| TOTALS | BULK LITRES | | LITRES OF ALC |
|---|---|---|---|
| | 22,158 | | 14,690.754 |

SIGNED: 29/08/2025

The exporter of the products covered by this document customs authorization No. (EORI GB260226101000) declares that except where otherwise clearly indicated, these products are of UK preferential origin.

**6 CDS Export**

[1] Declaration [1/1] | [1/2] EX | A

MRN: 25GB 9JKA BXFQ SEHA A6

| | | | |
|---|---|---|---|
| [3] Forms [1/4] 1 \| 1 | [5] Items [1/9] 1 | [6] Total packages [6/18] 1 | [7] Reference [2/4] |

| | | | |
|---|---|---|---|
| [2] Exporter [3/1]<br>JOHN DEWAR & SONS LIMITED<br>1700 LONDON ROAD<br>GB G32 8XR GLASGOW | No [3/2]<br>GB260226101000 | [2] Consignor [3/24] | No [3/25] |
| [8] Consignee [3/9]<br>GEORGIEVSKY FACTORY<br>STROITELEY STREET 15<br>RU 143090 KRASNOZNAMENSK | No [3/10] | Carrier [3/31] | No [3/32]<br>PALTANK LTD |
| [14] Declarant [3/17]<br>JOHN DEWAR & SONS LIMITED<br>LAND AT PONIEL HOLDINGS<br>GB ML11 0RL NEAR DOUGLAS | No [3/18]<br>GB260226101000 | [14] Representative [3/19] | No [3/20] |

| | | | |
|---|---|---|---|
| [15a] Dispatch country [5/14] GB | [17a] Destination country [5/8] RU | [14] Representative status [3/21] | |
| [18] Departure transport [7/7] 30\|SN74 YHY | | [S13] Countries of routing [5/18] GB\|RU | |
| [21] Border transport [7/14] 11\|FAV | [19] Ctr [7/2] 1 | [22] Invoice total [4/10][4/11] GBP | |
| [25] Border transport mode [7/4] 1 | [26] Inland trp mode [7/5] 3 / [21] Ctry [7/15] GB | [23] Exchange rate [4/15] | [24] Nature of transaction [8/5] 1 |
| [30] Location of goods [5/23] GBBUGLWLEJCSE | | [35] Gross mass [6/5] 19832.000 | |

| | | |
|---|---|---|
| [31] Container numbers [7/10]<br>PTKU2609146 | [40] Simplified declaration/Previous documents [2/1]<br>Z\|DCR\|5GB260226101000-000883590818 | [D] Seals [7/18]<br>1629565\|1629566\|1629567\|1629568 |
| [44] Authorisation Holders [3/39]<br>CSE\|GB260226101000<br>EXW\|GB260226101000 | [44] Additional Fiscal Reference [3/40] | [44] Additional Supply Chain Actors [3/37] |

[32] Item No [1/6] 1

| | | | |
|---|---|---|---|
| [31] Packages - number [6/10], kind[6/9] and shipping marks [6/11]<br>1\|VL\|AS PER PACKING LIST | | [31] Description of goods [6/8]<br>BLENDED SCOTCH WHISKY > 2 LITRES | CUS code [6/13] |
| [33] Commodity [6/14] 22083079 | EU add. code(s) [6/16] | National add. code(s) [6/17] | |
| [37] Procedure [1/10] 1007 | Add. procedure code(s) [1/11] 1CS | [7] Reference [2/4] | |
| | | [15a] Dispatch country [5/14] GB | [17a] Dest ctry [5/8] / Origin ctry [5/15] |
| [40] Simplified declaration/Previous documents [2/1]<br>Z\|270\|0883590818 | | [35] Gross mass (kg) [6/5] 19832.000 | [38] Net mass (kg) [6/1] 19832.000 |
| | | [41] Suppl. Units [6/2] 14690.75 | [44] UNDG code [6/12] |
| | | [46] Statistical value [8/6] 47598.04 | [S29] Trp MoP[4/2] / [24] Trans nature[8/5] |

[44] Documents, certificates and authorisations [2/3] Code|Id and part|Status|Reason|Issuing authority|Validity date|Units|Quantity

C676|GBCSE260226101000E20220916091953

C676|GBEXW260226101000E20220916091953

9022| |-|NOT SUBJECT TO SANCTIONS

[44] Additional information [2/2] Code|Description

00400|Exporter

| | | |
|---|---|---|
| Acceptance date/time | | |
| Declaration status | Customs Hold (Document Inspection) | |
| Status date/time | 2025-08-29 10:32:53 | |
| Departure date/time | | |
| [29] Office of exit [5/12] GB000059 | [S29] Trpt chgs MoP [4/2] Y | LRN [2/5] 0883590818 |
| [44] Office of presentation [5/26] | [44] Supervising office [5/27] | Specific circumstance indicator [1/7] |
| [52] Guarantee Type[8/2]\|Reference[8/3]\|Other reference\|Access code\|Curr\|Amount\|Office | | [49] Identification of warehouse [2/7] YGB00004323556GB |
| | | [54] Place and date<br>29/08/2025 11:26:13 |
| | | Signature and name of declarant/representative [1/8]<br>DOUGLAS MILLER |

EUROPEAN COMMUNITY

EXPORT ACCOMPANYING DOCUMENT

**MRN 25GB9JKABXFQSEHAA6**

| | |
|---|---|
| Consignor/Exporter(2) | No GB260226101000 |
| JOHN DEWAR & SONS LIMITED<br>1700 LONDON ROAD<br>GLASGOW<br>G32 8XR<br>GB | |
| DECLARATION TYPE(1) | EX A |
| Other SCI(S32) | |
| 3 Forms | 1 1 |
| Sec. Decl(S00) | S |
| Items(5) | 1 |
| Total Packages(6) | 1 |
| Issuing Date: | 29/08/2025 |
| Customs Office: | GB000059 |
| Consignee(8) | No. |
| GEORGIEVSKY FACTORY<br>STROITELEY STREET 15<br>KRASNOZNAMENSK<br>143090<br>RU | |
| Reference numbers(7) | 5GB260226101000-000883590818 |
| Transport charges method of payment(s29) | Y |
| C. disp/exp Code(15) | a GB |
| Country destin. Code(17) | a RU |
| Countr(ies) of routing codes(S13) | GB, RU, |
| Declarant/Representative(14) | No. GB260226101000 |
| JOHN DEWAR & SONS LIMITED<br>LAND AT PONIEL HOLDINGS<br>NEAR DOUGLAS<br>ML11 0RL<br>GB | |
| Representative of person lodging sum.decl. (14b) | No. -- |
| | --<br>--<br>--<br>--<br>-- |
| Identity and nationality of means of transport at departure(18) | SN74 YHY |
| Gross Mass(kg)(35) | 19832.000000 |
| Mode of transport at the border(25) | 1 |
| Location of goods(30) | GBBUGLWLEJCSE |
| Seal Number(S28) | 1629565 1629566 1629567 1629568 |
| Office of exit(29) | GB000059 |
| Packages and description of goods(31) | Marks and numbers - Container No(s) - Number and kind<br>AS PER PACKING LIST - PTKU2609146, - 1 VL |

| | | | | | |
|---|---|---|---|---|---|
| 32 Item No | Number and kind of packages, marks and number of packages(31/1) | Description of goods(31/2) | | | |
| Consignor/Exporter(2) | | Consignee(8) | | | |
| Identity of means of transport at departure(18) | | Commodity code(33) | | | Country of Origin(5/15) |
| Unique consignment reference number(7) | | Summary declaration/Previous document(40) | | | |
| Produced documents / certificates(44/1) | | Container numbers(31/3) | | | |
| Special mentions(44/2) | | Procedure(37) | C. Exp.(15a) | C. Dest.(17a) | Gross mass(kg)(35) |
| UNDG(44/4) | Transport charges method of payment code(S29) | Declaration type(1) | Statistical value(46) | | Net mass(kg)(38) |
| 1 | 1 VL AS PER PACKING LIST | BLENDED SCOTCH WHISKY > 2 LITRES | | | |
| | | | | | |
| | | 22083079 | | | |
| | | Z\|270\|0883590818 | | | |
| C676 GBCSE260226101000E20220916091953, C676 GBEXW260226101000E20220916091953, 9022 | | | | | |
| 00400 Exporter | | 1007 1CS | | | 19832.000000 |
| | | | 47598.04 | | 19832.000000 |

CONTROL BY OFFICE OF DISPATCH/EXPORT(E)

Result:

Seals affixed: Number:

identity:

Time limit (date):

CONTROL BY OFFICE OF EXIT(K)

Date of arrival:29/08/2025

Examination of seals:

Remarks:

UNITED KINGDOM - EXP-SAD/SEC

3

Copy for the consignor/exporter

2 Consignor/Exporter — No GB260226101000

JOHN DEWAR & SONS LIMITED
1700 LONDON ROAD
GLASGOW
G32 8XR
GB

1 DECLARATION TYPE: EX A — Other SCI(S32)

A OFFICE OF DISPATCH/EXPORT: GB000059 25GB9JKABXFQSEHAA6

3 Forms: 001 1

4 Loading lists

5 Items: 1

6 Total Packages: 1

7 Reference numbers: 5GB260226101000-000883590818

8 Consignee — No.

GEORGIEVSKY FACTORY
STROITELEY STREET 15
KRASNOZNAMENSK
143090
RU

Seal Number(S28): 1629565 1629566 1629567 1629568

14 Declarant/Representative — No. GB260226101000

JOHN DEWAR & SONS LIMITED
ML11 0RL
GB

Transport charges method of payment(s29): Y

15 C. disp/exp Code: a GB

17 Country destin. Code: a RU

Countr(ies) of routing codes(S13): GB, RU

18 Identity and nationality of means of transport at departure: SN74 YHY

19 Ctr.: 0

20 Delivery Terms

21 Identity and nationality of means of transport crossing border: FAV GB

22 Currency and total amount invoiced: GBP 47598.04

23 Exchange rate: 1

24 Nature of transaction: 1

25 Mode of transport: 1 at the border

26 Inland mode: 3 of transport

3

29 Office of exit: GB000059

30 Location of goods: GBBUGLWLEJCSE

Packages and description of goods(31): Marks and numbers - Container No(s) - Number and kind

BLENDED SCOTCH WHISKY > 2 LITRES 1 VL AS PER PACKING LIST

32 Item: 1 No

33 Commodity Code: 22083079

34 Country origin Code: a b

35 Gross mass(kg): 19832.00

37 PROCEDURE: 1007 1CS

38 Net mass(kg): 19832.00

40 Summary declaration/Previous document: Z 270 0883590818

41 Supplementary units: 14690.754

Seal number(S28)

44 Additional information/ documents produced/ certificates and authorisations: C676-GBCSE260226101000E20220916091953, C676-GBEXW260226101000E20220916091953, 9022-NOT SUBJECT TO SANCTIONS, 00400-Exporter

A.I. Code

46 Statistical value: 47598.04

47 calculation of taxes

| Type | Tax Base | Rate | Amount | MP |
|---|---|---|---|---|
| | | | | |
| Total | | | | |

48 Deferred payment

49 Identification of warehouse: YGB00004323556GB

B ACCOUNTING DETAILS

50 Principal — No — Signature:

represented by

Place and date:

CONTROL BY OFFICE OF EXIT(K)

Stamp:

Date of arrival:

Examination of seals:

Remarks:

CONTROL BY OFFICE OF DISPATCH/EXPORT(E)

Stamp:

Result:

Seals affixed: Number:

identity:

Time limit (date):

Signature

54 Place and date: 29/08/2025

Signature and name of declarant/representative
DECLARED ELECTRONICALLY TO UK CUSTOMS
25GB9JKABXFQSEHAA6
DOUGLAS MILLER

John Dewar & Sons Ltd



# INVOICE

Invoice N° / Date
2575096768 / 29.08.2025
Order N°
4967300
Your Reference
BULK_2237
Country of Destination
Russian Fed.
Delivery Terms
FCA
Terms of Payment:
Netting 1 cycle
Due Date:
22.09.2025

**Place and Date of Issue**
**SCOTLAND** 29.08.2025

**Authorised Signature**

1 Bulk containing - 9812000045
Containing 14,690.754 LPA (WHISKY)
Country of Origin: United Kingdom

Currency GBP

Bill To:
BIL
BACARDI INTERNATIONAL LIMITED
P.O. BOX 720
HM CX HAMILTON
Bermuda

Ship To:
10208771
Georgievsky Factory
Tradition for Quality
Stroiteley street 15
143090 Krasnoznamensk
Russian Federation

Marks & Numbers
E.T.A. 30.09.2025
Container No PTKU2609146
Carrier Paltank Ltd

Container Seal No. 1629565
1629566;1629567;1629568

Remarks:
section 30(6) of the UK VAT code

| POS | QTY. | Unit of Meas. | Product Code | Description | Unit Price | Ext Amount |
|---|---|---|---|---|---|---|
| 10 | 14,690.754 | LPA | 9812000045 | GLASGOW BULK LPA GB 65% WLFB3YO | 3.2400 | 47,598.04 |

| | |
|---|---|
| Excise Duties | 0.00 |
| Subtotal | 47,598.04 |
| Tax | |
| **Total** | **47,598.04** |

**Total Gross Weight(KG)** 19,832.000
**Total Net Weight(KG)** 19,832.000

Exporter: Vat Reg No GB260226101
AWRS No XLAW00000101557
JOHN DEWAR AND SONS LIMITED
1700 London Road
GLASGOW G32 8XR
Tel 0141 551 4000
Fax 0141 551 4030

**Bank Details:**
Barclays Bank PLC
Bank Account Name: John Dewar & Sons
Sort Code: 200000
A/C: 03273881
Swift Code: BARCGB22XXX
IBAN: GB13BARC20000003273881

**COLLECTION**

**Note No.** **25347844-01**

160232

PALTANK LTD

View and Update here **PIN** 9E02

**Driver's Instructions**

**PICK UP EMPTY CONTAINER**

JGR COATBRIDGE
JGR
CONTAINER BASE
GARTSHERRIE ROAD
COATBRIDGE
ML5 2DY

**Container** 20' TANKTAINER **Trailer**

**Haulier** SN74 YHY (694 FL) BROWN (JAMES), JAMES

**Date** 29/08/25 **Time**

**Reference**

**Instructions**

**Vessel** **Num**

**Port** **Ref**

**COLLECT GOODS (1 of 1)**

JOHN DEWAR AND SONS LTD
LAND AT PONIEL HOLDINGS
SOUTH LANARKSHIRE
DOUGLAS
ML11 0RL

**Date** 29/08/25 **Time** 09:30

**Reference** 883590818 2501145

**Instructions**

**DROP OFF FULL CONTAINER**

GRANGEMOUTH DOCKS
CUT GM
FORTH PORTS
THE DOCK
GRANGEMOUTH
STIRLINGSHIRE
FK3 8TY

**Date** 29/08/25 **Time**

**Reference**

**Instructions**

| No. of Packages, Container and Seal No.s | Description of Goods | Weight Kg | Measure CBM |
|---|---|---|---|
| **PTKU2609146** | ALCOHOLIC BEVERAGES<br><br>ALCOHOLIC BEVERAGES<br><br>☑ Hazardous? | 24892.00 | |

The Driver is authorised to collect the above cargo.

TO BE COMPLETED BY SHIPPER

Arrived Collected Departed

Date:

Time:

Container Received Seal Intact

Name: D. Miller

Signature:

Seal No.:

TO BE COMPLETED BY DRIVER

Container/Trailer received in apparent good condition* from container depot

Date:

Arrival Time:

Departure Time:

Name:

Signature:

EFTCO®
www.eftco.org

**EFTCO Cleaning Document ©**

**GB 4417599**

www.nrtca.co.uk
+44 (0)1977 607607
+44 (0)1977 607004
enquiries@nrtca.co.uk
NRTCA

1

# UK Tank Cleaning Station

RUSSELL

John G Russell (Transport) Ltd
Containerbase
Gartsherrie Road
Coatbridge
ML5 2DY

Container Control -Tel: 01236 703320
Container Control - Fax: 01236 703325
Email: container.control@johngrussell.co.uk
Out of hours Tel: 01236 703328

| | |
|---|---|
| 2 Customer reference number* | 3 Serial number |
| 4 Customer PAL001<br>PALTANK LTD, GORDON HOUSE<br>3-5 LEICESTER STREET<br>SOUTHPORT<br>MERSEYSIDE<br>PR9 0ER | 5 Identification numbers N/A<br>Vehicle N/A<br>Tank, Container PTKU2609146 |
| 6 Nature of product*<br>BULK WINE | 7 Next Load* |

8 Previous load

| Comp | UN N° | Name |
|---|---|---|
| | 1 | WINE |

9 Cleaning Procedures

EFTCO Code / Description*

F01 - Cleaning with portable water only - 1
P10 - Hot water spin (T>60°C) - 1
P01 - Cold water spin - 1
T01 - Visual / Odour inspection - 1
E90 - Sealing - 1
F98 - Food approved cleaning station - 1
F50 - Food approved detergent - 1
F63 - PH VALUE BETWEEN 6.5 - 8. - 1

Comp | 10 Additional Services

11 Comments

SEALS 3450352, 53, 54
SENSORY CHECK, ATP - RLU BETWEEN 120 TO 130

| | |
|---|---|
| 12 Name cleaner*<br>BRIAN MCISAAC | 13 Time In* 2025-07-01 08:48:35<br>Time Out 2025-08-29 07:37:40 |

The cleaning station and the driver confirm that the above service(s) to clean the tank have been carried out (see EFTCO definition of 'clean').

| | |
|---|---|
| 14 Cleaning Station<br>Name BRIAN MCISAAC<br>Signature | 15 Driver*<br>Name<br>Signature |

* Optional)

EFTCO Original

EFTCO®
www.eftco.org

**EFTCO Cleaning Document ©**

**GB** 4417599

www.nrtca.co.uk
+44 (0)1977 607607
+44 (0)1977 607004
enquiries@nrtca.co.uk

NRTCA

1

# UK Tank Cleaning Station

RUSSELL

John G Russell (Transport) Ltd
Containerbase
Gartsherrie Road
Coatbridge
ML5 2DY

Container Control - Tel: 01236 703320
Container Control - Fax: 01236 703325
Email: container.control@johngrussell.co.uk
Out of hours Tel: 01236 703328

| | |
|---|---|
| 2 Customer reference number* | 3 Serial number |
| 4 Customer PALCOT<br>PALTANK LTD, GORDON HOUSE<br>3-5 LEICESTER STREET<br>SOUTHPORT<br>MERSEYSIDE<br>PR9 0ER | 5 Identification numbers N/A<br>Vehicle N/A<br>Tank, Container PTKU2609146 |
| 6 Nature of product*<br>BULK WINE | 7 Next Load* |

| Comp | 8 Previous load UN N° | Name | 9 Cleaning Procedures EFTCO Code / Description* |
|---|---|---|---|
| | 1 | WINE | F01 - Cleaning with portable water only - 1<br>P10 - Hot water spin (T>60°C) - 1<br>P01 - Cold water spin - 1<br>T01 - Visual / Odour inspection - 1<br>E90 - Sealing - 1<br>F98 - Food approved cleaning station - 1<br>F50 - Food approved detergent - 1<br>F63 - PH VALUE BETWEEN 6.5 - 8. - 1 |

| Comp | 10 Additional Services |
|---|---|
| | |

11 Comments

SEALS 3456352, 53, 54
SENSORY CHECK, ATP - RLU BETWEEN 120 TO 130

| | |
|---|---|
| 12 Name cleaner*<br>BRIAN MCISAAC | 13 Time In* 2025-07-01 08:48:35<br>Time Out 2025-08-23 07:57:10 |

The cleaning station and the driver confirm that the above service(s) to clean the tank have been carried out (see EFTCO definition of 'clean').

| | |
|---|---|
| 14 Cleaning Station<br>Name BRIAN MCISAAC<br>Signature CHIGGL | 15 Driver*<br>Name<br>Signature |

* Optional)

EFTCO copy

Haulage
and
Warehousing

JOHN G RUSSELL
(TRANSPORT) LTD
CONTAINERBASE
100 GARTSHERRIE ROAD

Tel. 01236 703300
Fax

CONTAINER INTERCHANGE DOCUMENT

-- OUTWARD --

| | | | |
|---|---|---|---|
| Date | 29/08/2025 | Time | 07:37 |
| Customer Code | PAL001 | Customer Name | PALTANK LTD |
| Container Number | PTKU2609146 | Container Type | 20ft Tank |
| Haulier | Mitchell Transport | Mode | Empty |
| Vehicle Reg. | N/A | Condition | Sound |
| Trailer Reg. | | Release Ref. | |
| Comments | SN74 YHY | | |

DAMAGE MUST BE RECORDED BELOW

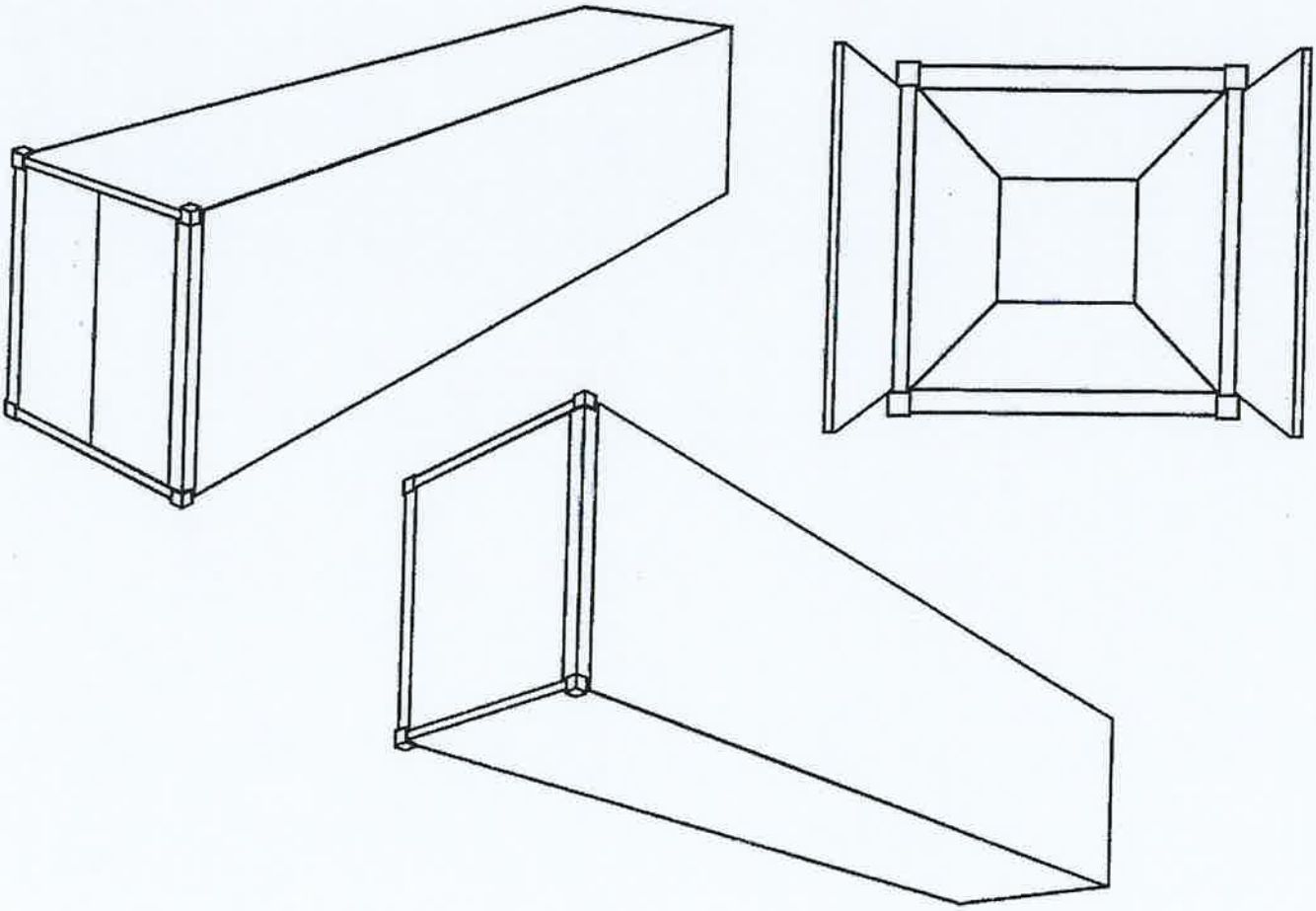

UNIT RECEIVED / DELIVERED AS INDICATED ABOVE

SIGNED FOR _____

SIGNED FOR DEPOT _____

Spirit Drinks Verification (SDV) Look-up Facility

HOME

# Facility Details

## Name and Location

| Name | Trading Name | Address 1 | Postcode | Country |
|---|---|---|---|---|
| Limited Liability Company Geo rgievsky Factory. Traditions of Quality | | 15 Stroiteley street | 143090 | RUSSIAN FEDE RATION |

## Processes and Verification

| Process Name | Verified From | Verified To | Geographical Indicator |
|---|---|---|---|
| Bottling & Labelling | 09/12/2015 | 09/12/2025 | Scotch Whisky |

Return to Search Results

English | Welsh

SDV Look-up Facility - Copyright © HM Revenue and Customs

© Crown Copyright | Privacy Policy | Accessibility

| | | | |
|---|---|---|---|
| TANK CAPACITY = 26000 | | EXPORTS | VAT NUMBER 755 |
| DATE | SPIRIT TYPE | | |
| 29.8.25 | 4101 | | TANKER NO. PTKU 2609146 |
| VAT START | 44753 | | REQ L/A 14857.7 |
| TANK | R3 | | BULK 22376 |
| RADAR | 22683 | | TARE 3670 |
| FLOW METER | 22404 | | A.Y.S 17/8/22 |
| W8 | 22070 | | CLEANING DATE 29/8/25 |
| BAY | 1 | | LOADER SIGNATURE |
| | | | C/ROOM SIGNATURE |
| SEALS | 1629565, 66, 67, 68 | | |
| | TEMP 15 °C | STRENGTH 66.3% | |
| W8 22070 | X STR 0.663 | X T.C.F 1.004 | 14690.939 |
| X HDM 0.8986 | | DIVIDE STRENGTH | 0.663 |
| 19832 KG | | BULK @ 20 | 22158 |
| | | X STRENGTH | 0.663 |
| | | L/A @ 20 | 14690.754 |
| | | | X £3.24 |
| | | | £47598.04 |
| | | REG SN74 YHY | |
| LOADING START: | | | |
| LOADING FINISH: | | | |
| | | ISAP TIME 11 :05 | |